NOTICE OF PROPRIETARY RIGHTS
THIS DOCUMENT CONTAINS CONFIDENTIAL TECHNICAL DATA, INCLUDING TRADE SECRETS, PROPRIETARY TO TIMES MICROWAVE SYSTEMS. DISCLOSURE OF THIS DATA IS EXPRESSLY CONDITIONED UPON YOUR ASSENT THAT ITS USE IS LIMITED TO USE WITHIN YOUR COMPANY ONLY. ANY OTHER USE IS STRICTLY PROHIBITED WITHOUT THE PRIOR WRITTEN CONSENT OF TIMES MICROWAVE SYSTEMS.

SD48609

SYM	REVISION DESCRIPTION	DFTM	DATE	APPD	DATE
A	RELEASED FOR PRODUCTION	J.D.B.	1/11/94	J.D.B.	1/12/94
B	CHANGED PER CDC #31926	D.J.H.	6/28/10	J.D.B.	6/28/10

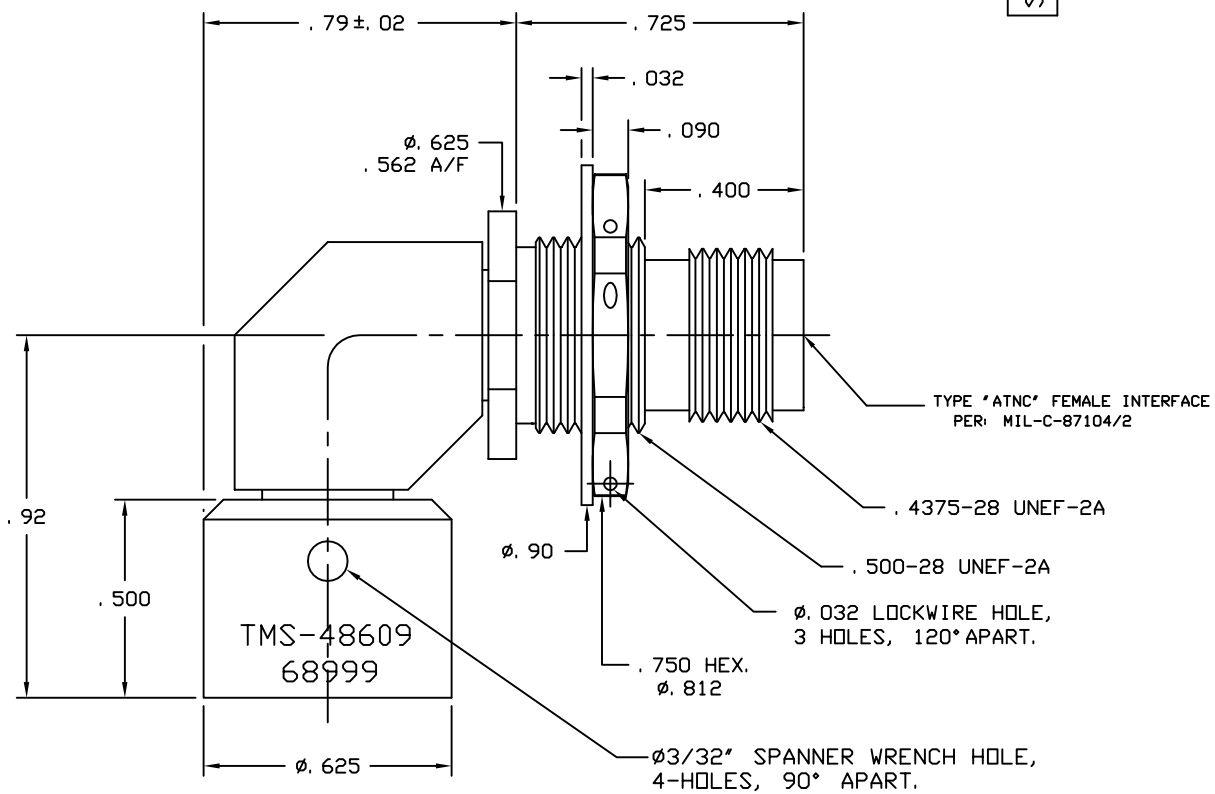

PART NAME	MATERIAL & SPEC. NUMBER	FINISH & SPEC. NUMBER
DIELECTRICS	TEFLON, ASTM D1710	NONE
COUPLING NUT	STAINLESS STEEL, ASTM A582	PASSIVATE, AMS-QQ-P-35
JAM NUT & WASHER	STAINLESS STEEL, ASTM A582	PASSIVATE, AMS-QQ-P-35
BODIES	STAINLESS STEEL, ASTM A582	PASSIVATE, AMS-QQ-P-35
CONTACTS	BERYLLIUM COPPER, ASTM B196	GOLD PLATE, MIL-G-45204

011643
W.O. NUMBER

MATERIAL:
SEE TABLE

DRAFTSMAN	John D. Bloomfield	1/11/94
CHECKER	John D. Bloomfield	1/12/94
APPROVED	John D. Bloomfield	1/12/94

UNLESS OTHERWISE SPECIFIED
ALL DIMENSIONS ARE IN INCHES
MACHINED SURFACES FINISH N/A RMS MAX.
REMOVE ALL BURRS .005 MAX. BREAK
MACHINE CORNERS .005 MAX. FILLET R.
TOLERANCES ON DECIMALS
.XX ±.03 .XXX ±.005
ANGLES ± 1° FRACTIONS ± 1/32

DO NOT SCALE DRAWING

TIMES MICROWAVE SYSTEMS

TITLE:
REPLACEABLE FRONT END (-125)
90° "ATNC" FEMALE BULKHEAD
(RECTANGULAR BODY)

DWG. SIZE B | DRWG. NO. SD48609 | REV. B
CODE IDENT. 68999 | SCALE: NONE | SHEET: 1 of 1